3200 Dual Mode Dip Switches

To sequence the dual gates on a PRO 3200, locate the series of four dip switches to program the sequence that the master and slave operators close.

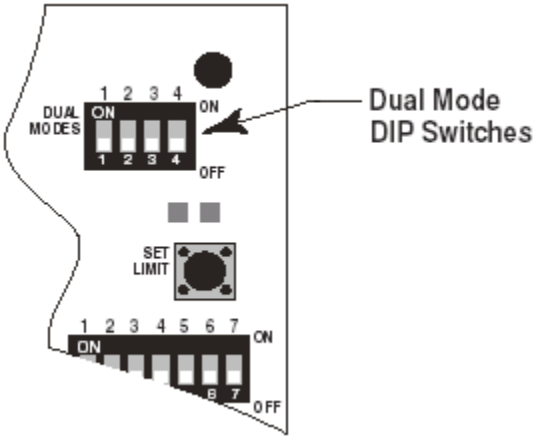

1) To set the gate opener so that only the Master gate functions in the single gate mode, set switch #1, switch #2, and switch #3 to the off position.

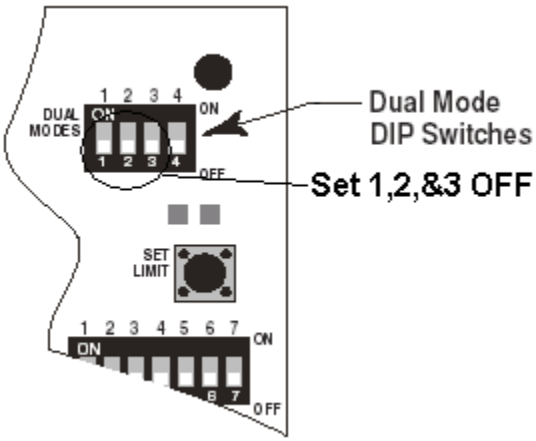

2) To sequence the gates so that the Master gate starts to open 2 seconds before the Slave gate and the Slave gate starts to close 4 seconds before the Master gate, set switch #1 to the on position and set switch #2 and switch #3 to the off position.

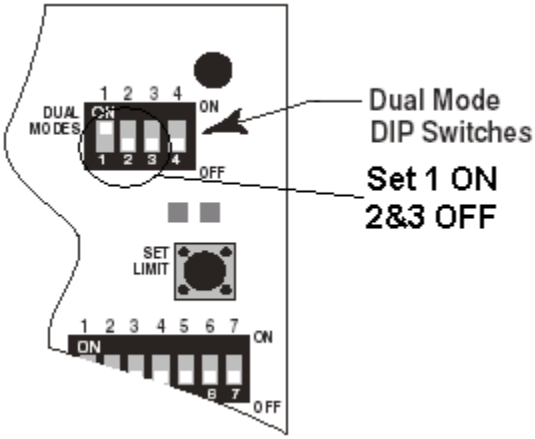

3) To sequence the gates so that the Master gate starts to open 2 seconds before the Slave gate and the Slave gate starts to close 8 seconds before the Master gate, set switch #1 and switch #3 to the on position and set switch #2 to the off position. This is the required setting if you are using the automatic gate lock.

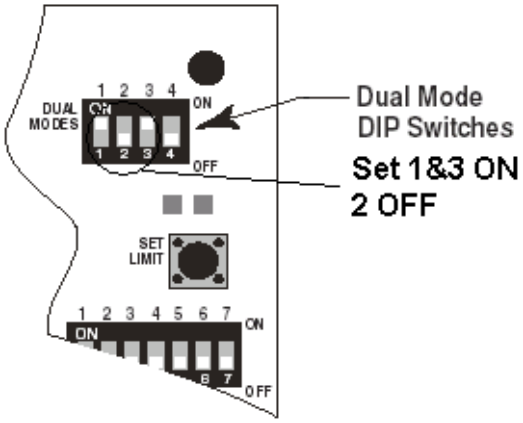

4) To sequence the gates so that the Master gate and the Slave gate open at the same time and the Slave gate starts to close 4 seconds before the Master gate, set switch #1 and switch #3 to the off position and set switch #2 to the on position.

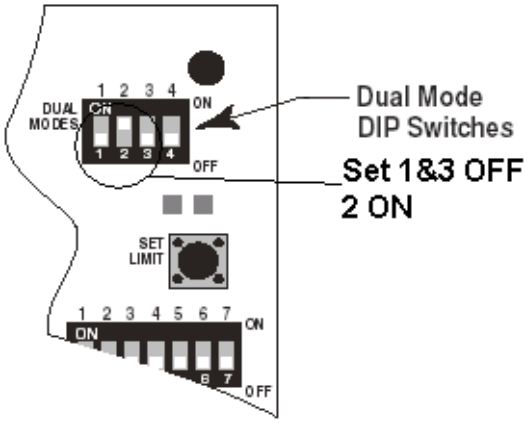

5) To sequence the gates so that the Master gate and the Slave gate open at the same time and the Slave gate starts to close 8 seconds before the Master gate, set switch #1 to the off position and set switch #2 and switch #3 to the on position.

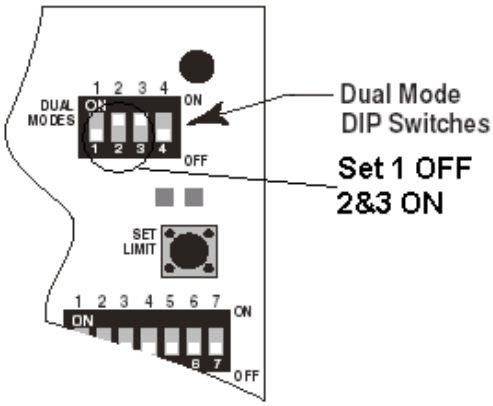

6) To sequence the gates so that the Master gate and the Slave gate open and close at the same time, set switch #1, switch #2, and switch #3 to the on position.

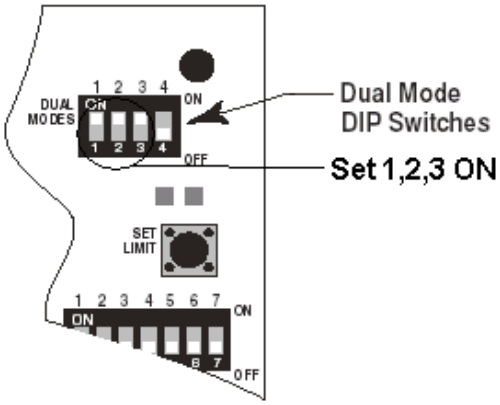

7) Dip switch #4 is used to set the limits of the gate opener and does not affect how the gates are sequenced.

If you have a dual gate opener, Mighty Mule 502 or PRO 2502, use dip switch #4 in the series of four switches for the dual modes to set the limits.

1) First make sure that the switches #1, #2, and #3 are set for dual gate operation.

2) Set switch #4 to the on position to set the slave gate.

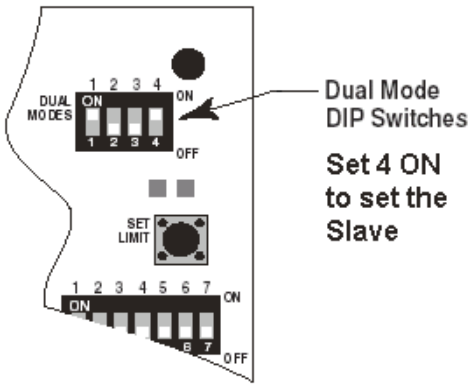
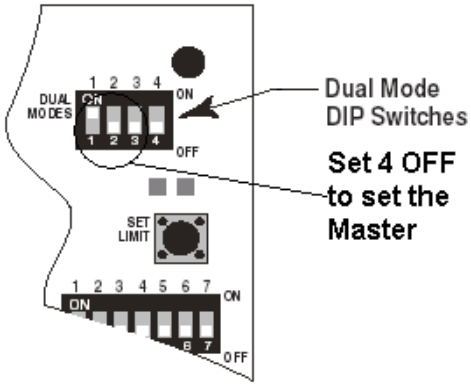
3) Set switch #4 to the off position to set the master gate.