NC Relay Controller

For use with:

GTO/PRO Magnetic Lock – R1200
Mighty Mule Light Kit – FM124
GTO/PRO Light Kit – FM400

Can also be used with:

Universal magnetic gate locks using 12 or 24 V AC or DC and up to 1 A.

GTO/PRO Magnetic Lock Instructions

The NC Relay Controller is required when using the GTO/PRO Magnetic Lock with GTO/PRO DC Post mount operators with the Generation 3 (Blue) circuit boards and the PROSL1000/2000 slide gate operators.

NOTE: Do not cut the jumpers on the relay circuit board if you intend to use it for the light kits.

1. Prepare the NC Relay Controller for use with the GTO/PRO Magnetic Lock.

Locate the two jumper wires. There is a jumper wire on each side of the relay.

Cut the jumper wires and separate so they cannot touch. This will disable the 12 VDC power source and allow the relay to be used as a dry contact. Failure to clip the jumper wires may result in damage to the NC Relay Controller board and the Magnetic Lock.

Locate the Delay Timer. Use a small flat blade screw driver and turn the Delay Timer counter clockwise to the left as far as it will go. This feature tells the relay how long to stay open after the motor on the gate opener starts to open. It should not be needed with the Lock.

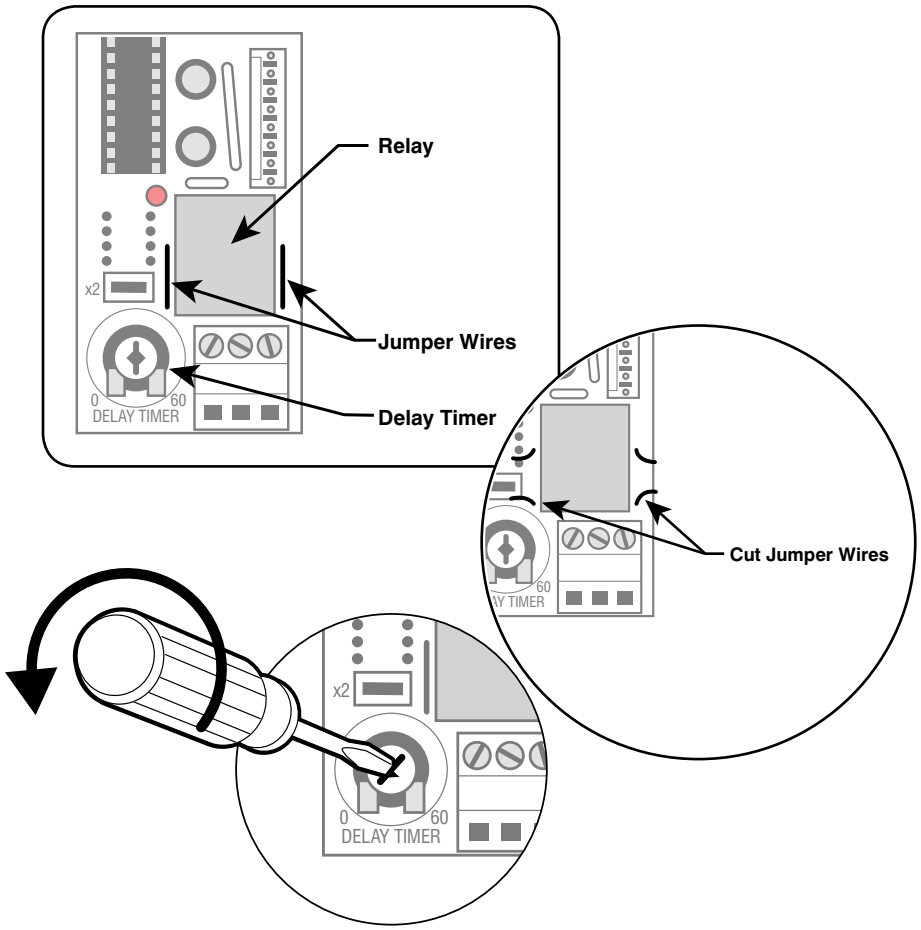

GTO Sales: (800) 543-GATE (4283) or (850) 575-0176 • Fax (850) 575-8912 or
GTO Technical Service (800) 543-1236 or (850) 575-4144

For 24 hour/day, 7 day/week Technical Service visit http://support.gtoinc.com/support/troubleshooter.aspx

rev- 09/04/09

2. Attach the wiring harness to the NC Relay Controller board.

3. Disconnect the photo cell from the two white wires in the wiring harness.

4. Cut, tape, or wire nut the two white wires so they cannot come into contact with each other. The white wires will be unused.

5. Twist the four blue wires together and connect them to the appropriate motor lead on the gate opener.

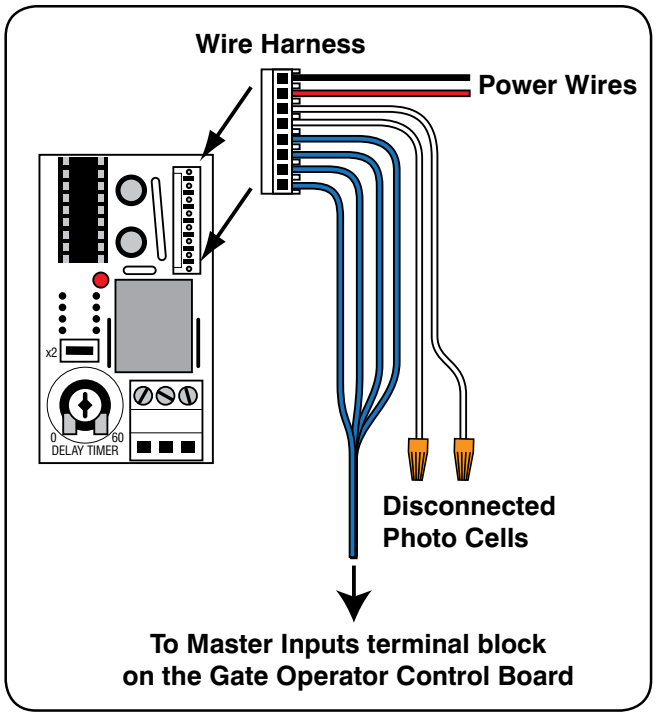

Generation 3 (blue) circuit board wiring:

For ***Pull to Open*** applications, connect the four blue wires to the RED motor lead in the Master Inputs terminal block.

For ***Push to Open*** applications, connect the four blue wires to the BLACK motor lead in the Master Inputs terminal block.

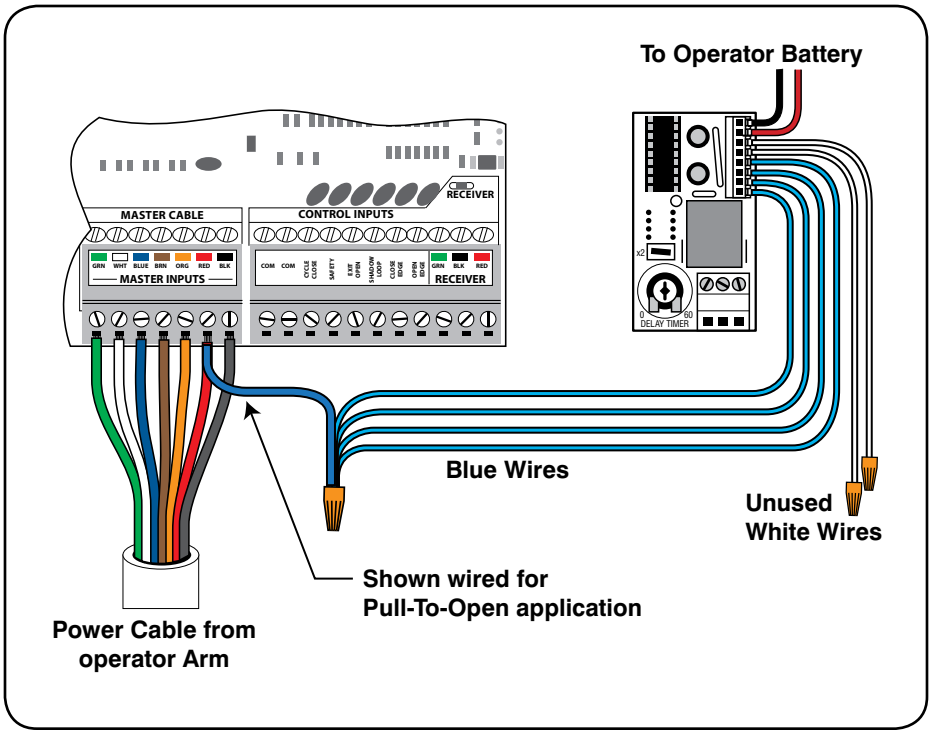

AQ251 (PROSL1000B/2000B) circuit board wiring:

For gates that ***Open to the Left***, connect the four blue wires to the BLACK motor lead in the First Operator.

For gates that ***Open to the Right***, connect the four blue wires to the RED motor lead in the First Operator.

6. Connect the RED wire from the Magnetic Lock to Terminal #2 on the NC Relay Controller Board.

7. Connect the BLACK wire with RED heat shrink from the Magnetic Lock Transformer to Terminal #3 on the NC Relay Controller Board.

8. Connect the BLACK wire from the Magnetic Lock to the BLACK wire from the Magnetic Lock Transformer using the orange wire nut provided.

9. Connect the BLACK wire from the wiring harness on the NC Relay Controller Board to the negative (- BLACK) battery post.

10. Connect the RED wire from the wiring harness on the NC Relay Controller Board to the positive (+ RED) battery post.

11. Plug the Mag Lock Transformer into the 120 VAC outlet.

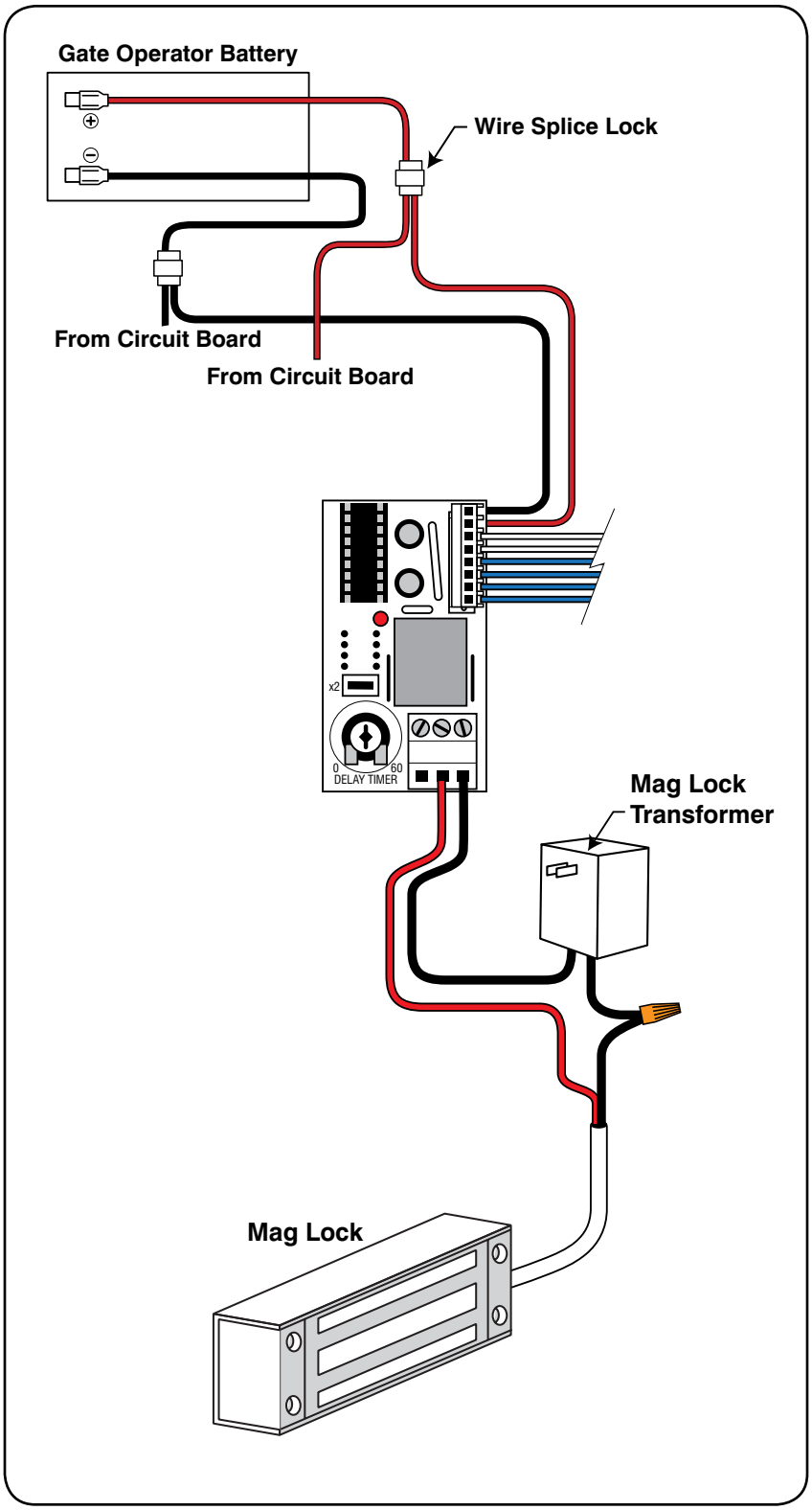

Mighty Mule & GTO/PRO Light Kit Instructions

The NC Relay Controller is a standard replacement part for both the Mighty Mule & GTO/PRO Light Kit. The NC Relay Controller can be installed in the light kit as is. Refer to the Light Kit manuals for wiring diagrams and programming instructions.

For installation on other brand magnetic locks (using 1 A or less):

1. Prepare the NC Relay Controller for use with Magnetic Lock.
   • Locate the two jumpers. There is a jumper on each side of the relay. Cut the jumpers and separate the wires so they cannot touch. This will disable the 12 VDC power source and allow the relay to be used as a dry contact. Failure to clip the jumpers may result in damage to the NC Relay Controller board and the Magnetic Lock.
   • Locate the Delay Timer. Use a small flat blade screw driver and turn the Delay Timer counter clockwise to the left as far as it will go. This feature tells the relay how long to stay open after the motor on the gate opener starts to open. It should not be needed with the Lock.

2. Attach the wiring harness to the NC Relay Controller board.

3. Disconnect the photo cell from the two white wires in the wiring harness.

4. Cut, tape, or wire nut the two white wires so they cannot come into contact with each other. The white wires will be unused.

5. Twist the four blue trigger wires together and connect them to the positive (+) 12 VDC power source that is activated only when the gate starts to open. Trigger wires must be activated only by 12 VDC.

6. Connect the positive (+) power wire from the magnetic lock to Terminal #2 on the NC Relay Controller Board.

7. Connect the positive (+) wire from the magnetic lock transformer to Terminal #3 on the NC Relay Controller Board.

8. Connect the BLACK (-) wire from the magnetic lock to the BLACK (-) wire from the magnetic lock transformer using the orange wire nut provided.

9. Connect the BLACK (-) wire from the wiring harness on the NC Relay Controller Board to a constant negative (-) 12 VDC power source.

10. Connect the RED wire from the wiring harness on the NC Relay Controller Board to a constant positive (+) 12 VDC power source.

11. Plug the Mag Lock Transformer into the 120 VAC outlet.