# SL1000/2000 Blowing Fuses

The fuse blows because the motor gets into a bind or strain. The motor pulls more and more current from the battery attempting to do its work until the fuse blows.

If you have an SL1000/2000 series, disconnect the chain and operate the gate opener with a remote, push button or keypad without a load. If it operates properly without blowing fuses while disconnected from the gate, the problem is with the gate.

Lift the quick release pins **UP**, then pull them **OUT** of the chain brackets

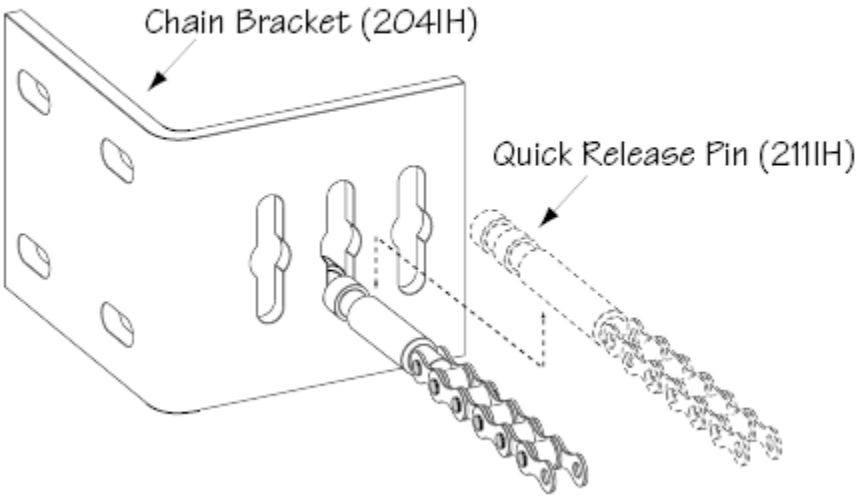


Check for something on or about the gate out of level, out of plumb, binding, pinching, dragging, etc. Make sure that your hinges and pivot points are well lubricated.

Be sure the gate is properly installed and slides smoothly before installing the GTO/PRO Slide Gate Operator. The gate must be plumb, level, and move freely. **The gate must not bind or drag on the ground.** *Never use a wheel on the gate, because the additional drag and resistance can cause the operator to obstruct.*

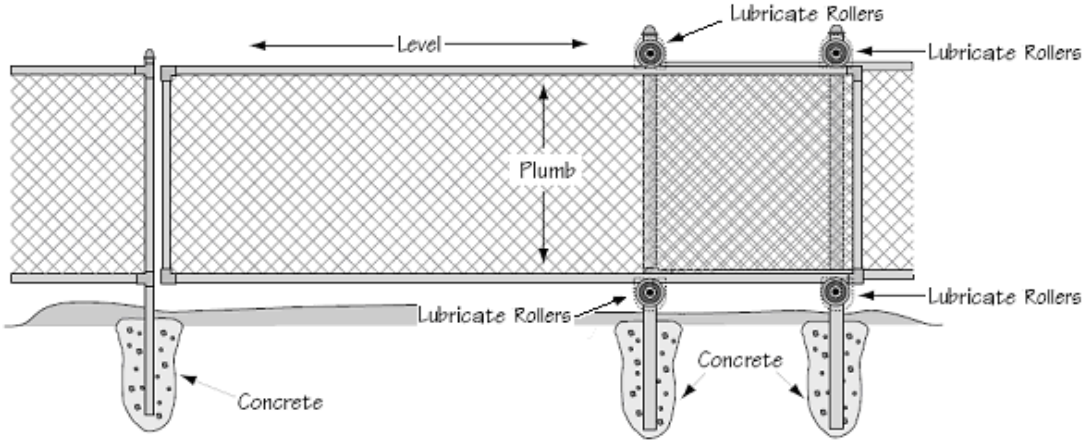

Check the open and closed position limits and if necessary, reset them using the nuts on the limit shaft.

**If your gate opens from Right to Left:**

1. Gate Opening: For gate to open further, turn Limit Nut A counterclockwise. For gate to open less, turn Limit Nut A clockwise.

2. Gate Closing: For gate to close further, turn Limit Nut B counterclockwise. For gate to close less, turn Limit Nut B clockwise.

**However, if your gate opens from Left to Right:**

1. Gate Opening: For gate to open further, turn Limit Nut B counterclockwise. For gate to open less, turn Limit Nut B clockwise.

2. Gate Closing: For gate to close further, turn Limit Nut A counterclockwise. For gate to close less, turn Limit Nut A clockwise.

Once the limit switches are adjusted, make sure the limit switch plate rests in the grooves on both limit nuts.

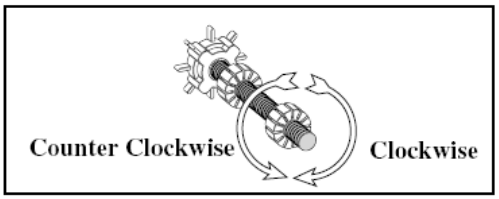


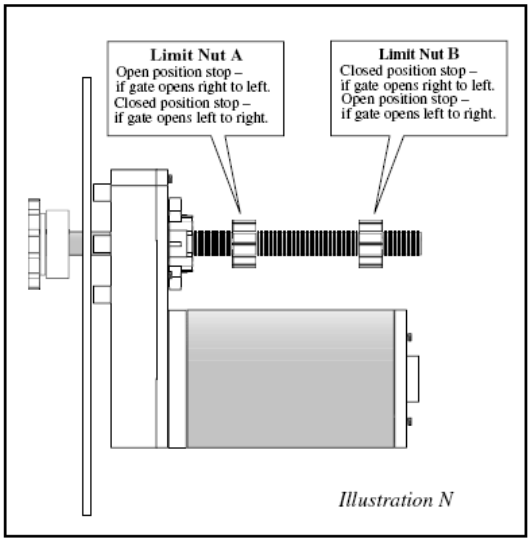


*Illustration N*

If you have a motor with a brake, check the brake to ensure that it is not sticking. Lubricate the brake with silicone spray.

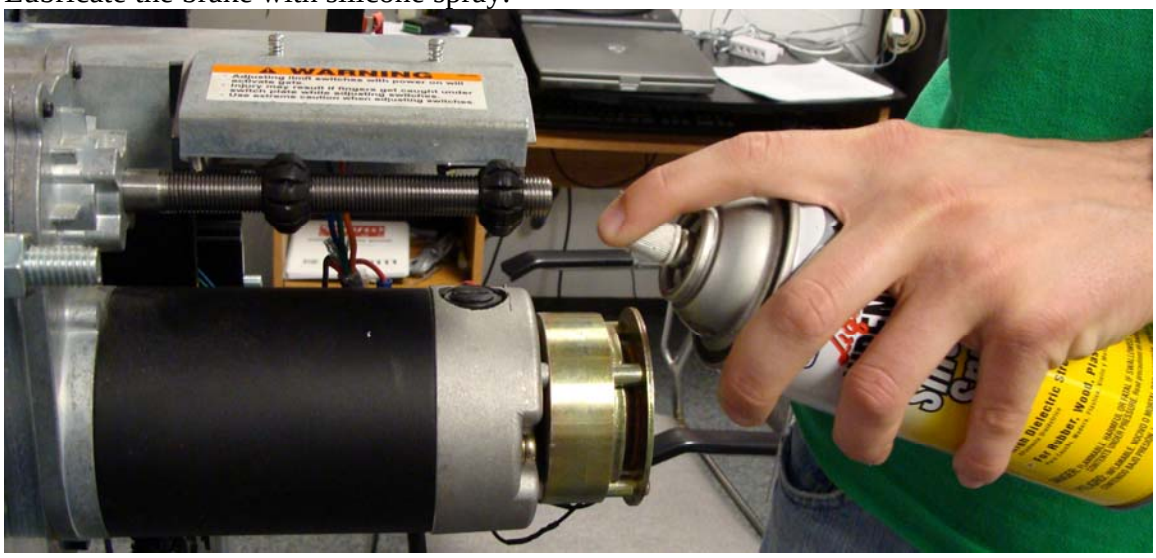

If the battery is three to five years old, you may want to load test the battery. If the battery has a dead cell, it may not have enough power to hold the brake open for the duration of the open or closed cycle.

**To load test the battery:**

1) Disconnect the transformer from the circuit board.

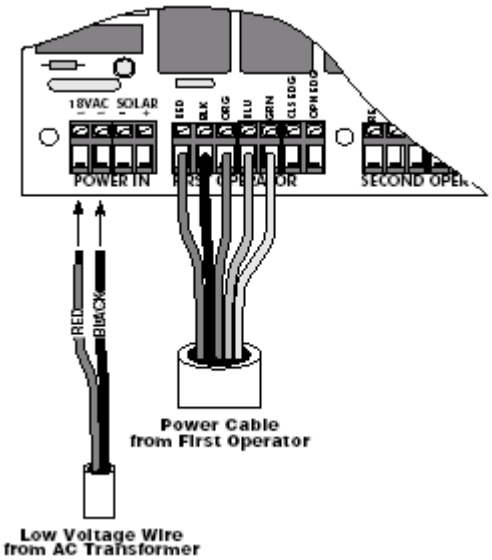


2) Check to see that the voltage across the battery is about 12.52 to 13 vdc.

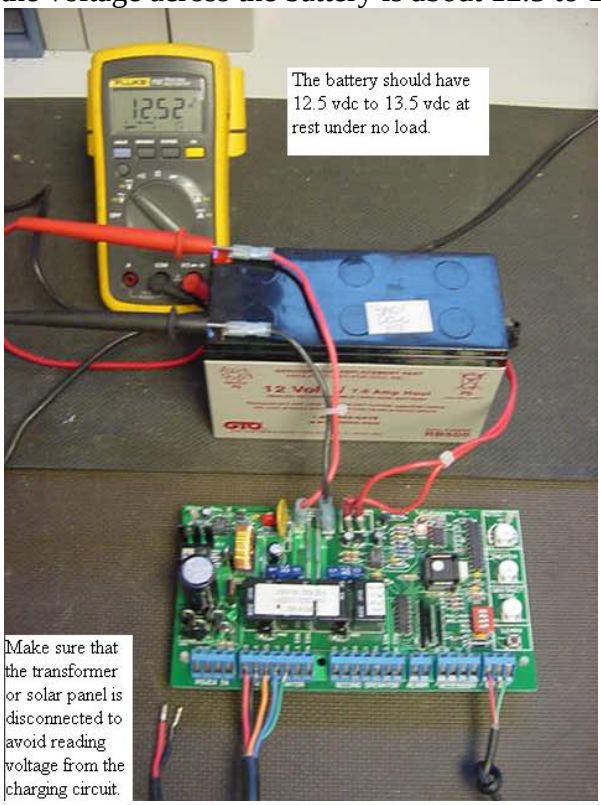

3) If the voltage is more than 12vdc, try to activate the opener with your transmitter or by shorting the Cycle/Close and Common terminals on the accessory terminal block while monitoring the battery voltage with your meter. The voltage should not drop more than 1 vdc. For instance, if the battery is charged to 13 vdc, the voltage should not drop more than 12 vdc. If the voltage does drop more than 1vdc, then you have a dead or weak cell in the battery and it needs to be replaced.

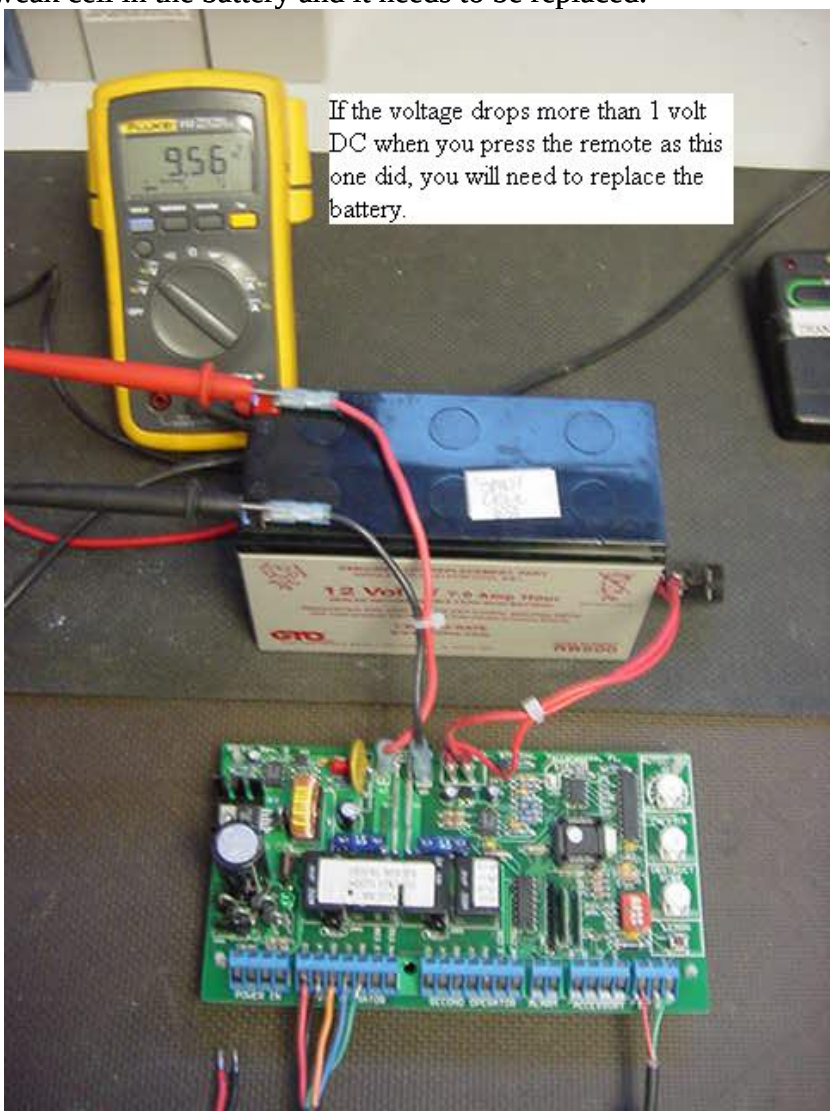

4) If the voltage is not more than 12vdc, we need to put a full charge on the battery by charging at 12 volts dc and 2 amps dc or less for about 3 to 4 hours.

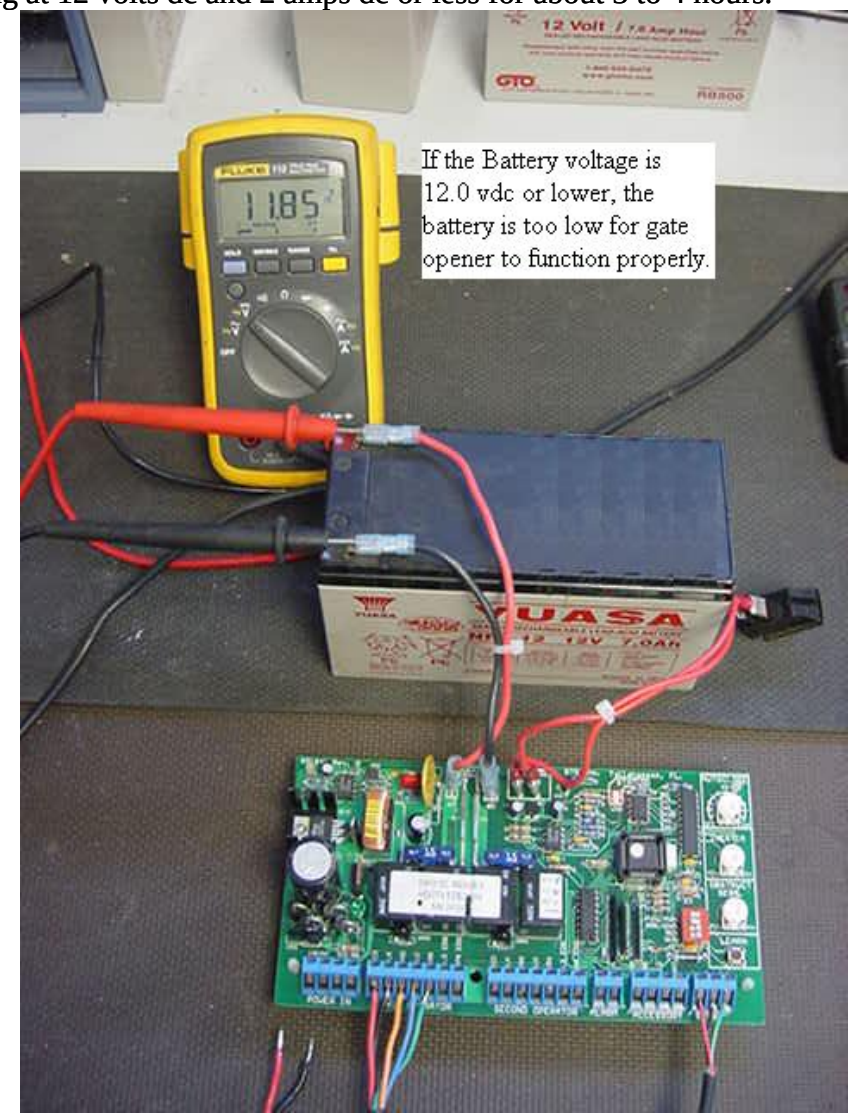


5) If you cannot get the battery to charge with the trickle charger, then replace the battery.